***DRS GENERATED*** PRINTED COPIES ARE UNCONTROLLED

SPS TECHNOLOGIES

DRAWING NUMBER SPS-B-76283

ISSUE DATE 1/28/74

REVISION

(3) 5/02/90 REVISED AND REDRAWN

(4) 9/08/92

(5) 6/05/97

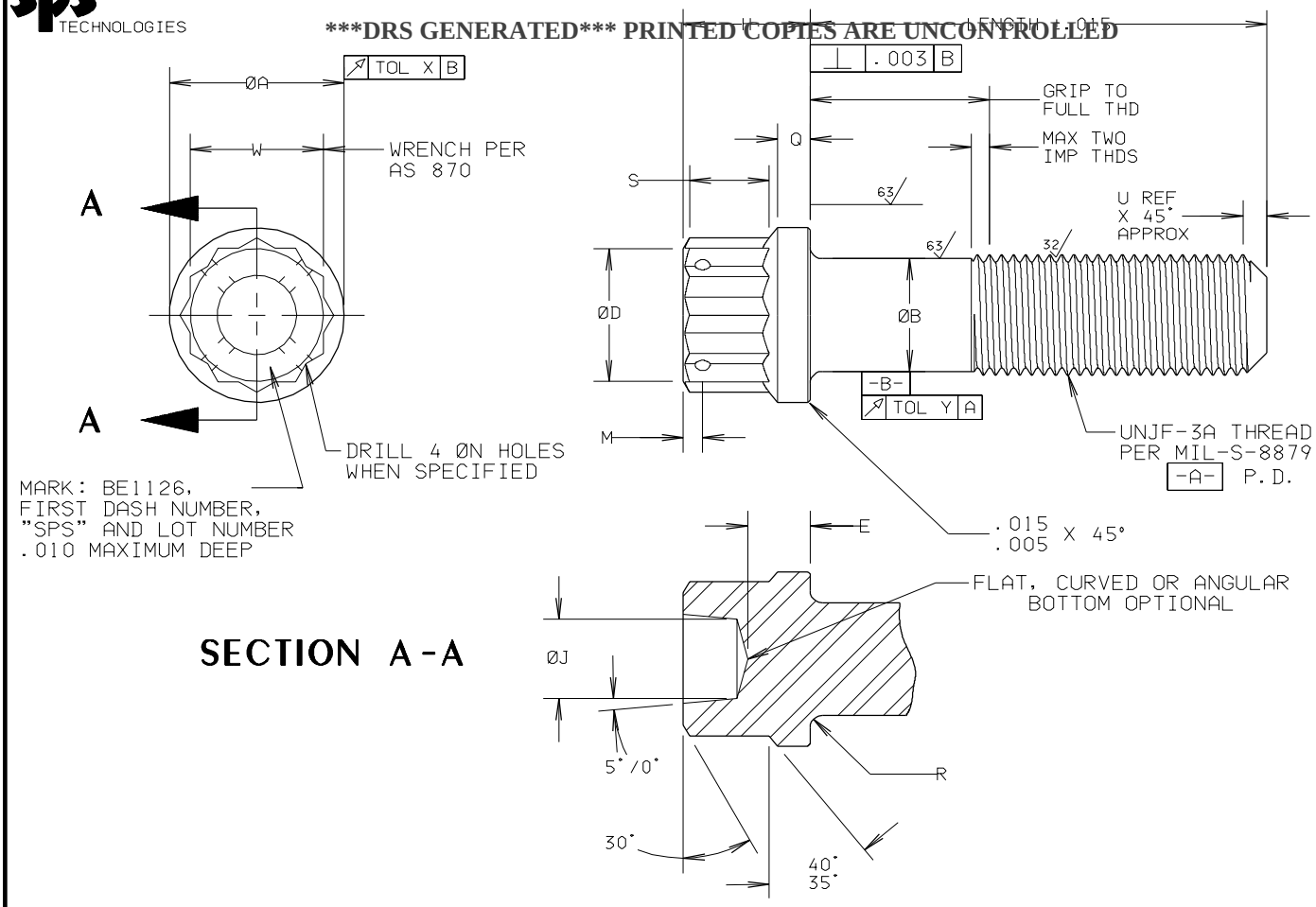


SECTION A-A

| BASIC PART NUMBER | THREAD UNJF-3A | ØA | ØB ±.005 | D +.000 -.015 | E | H | J | M | N | Q | R | S MIN | U REF | W NOM | X | Y |
|---|---|---|---|---|---|---|---|---|---|---|---|---|---|---|---|---|
| BE1126-3 | .1900-32 | .375 | .169 | .250 | .130 | .260 | .100 | .090 | .047 | .050 | .019 | .110 | .040 | .2500 | .011 | .006 |
| BE1126-4 | .2500-28 | .438 | .226 | .312 | .168 | .330 | .150 | .090 | .070 | .070 | .025 | .156 | .040 | .3125 | .013 | .006 |
| BE1126-5 | .3125-24 | .500 | .284 | .375 | .176 | .375 | .206 | .090 | .070 | .080 | .031 | .189 | .050 | .3750 | .015 | .006 |
| BE1126-6 | .3750-24 | .562 | .346 | .438 | .184 | .422 | .260 | .090 | .070 | .100 | .038 | .215 | .050 | .4375 | .017 | .006 |
| BE1126-7 | .4370-20 | .688 | .403 | .500 | .212 | .490 | .310 | .090 | .070 | .120 | .044 | .232 | .060 | .5000 | .019 | .006 |
| BE1126-8 | .5000-20 | .750 | .466 | .562 | .250 | .530 | .370 | .090 | .070 | .135 | .050 | .255 | .060 | .5625 | .023 | .006 |
| BE1126-9 | .5625-18 | .812 | .525 | .625 | .290 | .590 | .370 | .090 | .070 | .150 | .056 | .298 | .070 | .6250 | .026 | .006 |
| BE1126-10 | .6250-18 | .875 | .587 | .687 | .330 | .650 | .500 | .090 | .070 | .160 | .062 | .349 | .070 | .6875 | .028 | .008 |

1. MATERIAL: MP159 ALLOY PER AMS 5842.
2. HEAT TREATMENT: 260 KSI MINIMUM ULTIMATE TENSILE STRENGTH.
3. FINISH: PLAIN.
4. FLUORESCENT PENETRANT INSPECT 100% PER ASTM E 1417. ACCEPTANCE CRITERIA PER SPS-I-650.
5. PART NUMBER: BE1126 - 4 H - 8
   - 8 = GRIP LENGTH IN SIXTEENTHS
   - H = "H" = DRILLED HEAD; NO LETTER = UNDRILLED HEAD
   - 4 = DIAMETER IN SIXTEENTHS
   - BE1126 = BASIC PART NUMBER
6. COUNTERSINKING OF DRILLED HOLE AT MANUFACTURER'S OPTION.
7. CHAMFER "U" PLUS INCOMPLETE THREADS NOT TO EXCEED TWO PITCHES.
8. BREAK SHARP EDGES .003/.015.
9. REFERENCE DIMENSIONS ARE FOR DESIGN PURPOSES AND ARE NOT AN INSPECTION REQUIREMENT.
10. DIMENSIONS IN INCHES UNLESS SPECIFIED.
11. FOR WEIGHTS SEE SD.300.76283.

® MP159 IS A REGISTERED TRADEMARK OF SPS TECHNOLOGIES

INFORMATION ON THIS DOCUMENT IS A TRADE SECRET, PROPRIETARY, AND SHALL NOT BE USED OR REPRODUCED IN WHOLE OR IN PART WITHOUT WRITTEN AUTHORIZATION OF SPS TECHNOLOGIES.

TOLERANCES ± .010 AND ±2°
SURFACE ROUGHNESS 125√
UNLESS OTHERWISE NOTED

DRAWN: STEVE FOSTER DATE: 5/02/90
APPROVED: S. HUTCHINSON DATE: 6/6/97
APPROVED: L. KLINE

SPS TECHNOLOGIES

FSCM NO. 56878
CUSTODIAN: JENKINTOWN, PA.

STANDARDS AND SPECIFICATIONS
SPS-B-640 APPENDIX 25.5.1

TITLE BOLT, ENGINE, EXTERNAL WRENCHING
260 KSI MINIMUM TENSILE STRENGTH
MP159 ® APPLICATIONS TO 1100°F

PART NUMBER: BE1126

SHEET 1 OF 2 PROJECT 04A61

| DASH NUMBER | GRIP +.000 -.060 | LENGTH ±.015 | | | | | | | |
|---|---|---|---|---|---|---|---|---|---|
| | | -3 | -4 | -5 | -6 | -7 | -8 | -9 | -10 |
| | | .190 | .250 | .312 | .375 | .437 | .500 | .562 | .625 |
| | | | | | | | | | |
| | | | | | | | | | |
| | | | | | | | | | |
| 012 | .000 | | | | | | | | .750 |
| 010 | .000 | | | | | | .625 | .750 | .875 |
| 080 | .000 | | | | .500 | .625 | .750 | .875 | 1.000 |
| 06 | .000 | | .375 | .500 | .625 | .750 | .875 | 1.000 | 1.125 |
| 04 | .000 | .375 | .500 | .625 | .750 | .875 | 1.000 | 1.125 | 1.250 |
| 02 | .000 | .500 | .625 | .750 | .875 | 1.000 | 1.125 | 1.250 | 1.375 |
| 00 | .000 | .625 | .750 | .875 | 1.000 | 1.125 | 1.250 | 1.375 | 1.500 |
| 2 | .125 | .750 | .875 | 1.000 | 1.125 | 1.250 | 1.375 | 1.500 | 1.625 |
| 4 | .250 | .875 | 1.000 | 1.125 | 1.250 | 1.375 | 1.500 | 1.625 | 1.750 |
| 6 | .375 | 1.000 | 1.125 | 1.250 | 1.375 | 1.500 | 1.625 | 1.750 | 1.875 |
| 8 | .500 | 1.125 | 1.250 | 1.375 | 1.500 | 1.625 | 1.750 | 1.875 | 2.000 |
| 10 | .625 | 1.250 | 1.375 | 1.500 | 1.625 | 1.750 | 1.875 | 2.000 | 2.125 |
| 12 | .750 | 1.375 | 1.500 | 1.625 | 1.750 | 1.875 | 2.000 | 2.125 | 2.250 |
| 14 | .875 | 1.500 | 1.625 | 1.750 | 1.875 | 2.000 | 2.125 | 2.250 | 2.375 |
| 16 | 1.000 | 1.625 | 1.750 | 1.875 | 2.000 | 2.125 | 2.250 | 2.375 | 2.500 |
| 18 | 1.125 | 1.750 | 1.875 | 2.000 | 2.125 | 2.250 | 2.375 | 2.500 | 2.625 |
| 20 | 1.250 | 1.875 | 2.000 | 2.125 | 2.250 | 2.375 | 2.500 | 2.625 | 2.750 |
| 22 | 1.375 | 2.000 | 2.125 | 2.250 | 2.375 | 2.500 | 2.625 | 2.750 | 2.875 |
| 24 | 1.500 | 2.125 | 2.250 | 2.375 | 2.500 | 2.625 | 2.750 | 2.875 | 3.000 |
| 26 | 1.625 | 2.250 | 2.375 | 2.500 | 2.625 | 2.750 | 2.875 | 3.000 | 3.125 |
| 28 | 1.750 | 2.375 | 2.500 | 2.625 | 2.750 | 2.875 | 3.000 | 3.125 | 3.250 |
| 30 | 1.875 | 2.500 | 2.625 | 2.750 | 2.875 | 3.000 | 3.125 | 3.250 | 3.375 |
| 32 | 2.000 | 2.625 | 2.750 | 2.875 | 3.000 | 3.125 | 3.250 | 3.375 | 3.500 |
| 34 | 2.125 | 2.750 | 2.875 | 3.000 | 3.125 | 3.250 | 3.375 | 3.500 | 3.625 |
| 36 | 2.250 | 2.875 | 3.000 | 3.125 | 3.250 | 3.375 | 3.500 | 3.625 | 3.750 |
| 38 | 2.375 | 3.000 | 3.125 | 3.250 | 3.375 | 3.500 | 3.625 | 3.750 | 3.875 |
| 40 | 2.500 | | 3.250 | 3.375 | 3.500 | 3.625 | 3.750 | 3.875 | 4.000 |
| 42 | 2.625 | | 3.375 | 3.500 | 3.625 | 3.750 | 3.875 | 4.000 | 4.125 |
| 44 | 2.750 | | 3.500 | 3.625 | 3.750 | 3.875 | 4.000 | 4.125 | 4.250 |
| 46 | 2.875 | | 3.625 | 3.750 | 3.875 | 4.000 | 4.125 | 4.250 | 4.375 |
| 48 | 3.000 | | 3.750 | 3.875 | 4.000 | 4.125 | 4.250 | 4.375 | 4.500 |
| 50 | 3.125 | | 3.875 | 4.000 | 4.125 | 4.250 | 4.375 | 4.500 | 4.625 |
| 52 | 3.250 | | 4.000 | 4.125 | 4.250 | 4.375 | 4.500 | 4.625 | 4.750 |
| 54 | 3.375 | | 4.125 | 4.250 | 4.375 | 4.500 | 4.625 | 4.750 | 4.875 |
| 56 | 3.500 | | 4.250 | 4.375 | 4.500 | 4.625 | 4.750 | 4.875 | 5.000 |
| 58 | 3.625 | | 4.375 | 4.500 | 4.625 | 4.750 | 4.875 | 5.000 | 5.125 |
| 60 | 3.750 | | 4.500 | 4.625 | 4.750 | 4.875 | 5.000 | 5.125 | 5.250 |
| 62 | 3.875 | | 4.625 | 4.750 | 4.875 | 5.000 | 5.125 | 5.250 | 5.375 |
| 64 | 4.000 | | 4.750 | 4.875 | 5.000 | 5.125 | 5.250 | 5.375 | 5.500 |
| 66 | 4.125 | | 4.875 | 5.000 | 5.125 | 5.250 | 5.375 | 5.500 | 5.625 |
| 68 | 4.250 | | 5.000 | 5.125 | 5.250 | 5.375 | 5.500 | 5.625 | 5.750 |
| 70 | 4.375 | | 5.125 | 5.250 | 5.375 | 5.500 | 5.625 | 5.750 | 5.875 |
| 72 | 4.500 | | 5.250 | 5.375 | 5.500 | 5.625 | 5.750 | 5.875 | 6.000 |
| 74 | 4.625 | | 5.375 | 5.500 | 5.625 | 5.750 | 5.875 | 6.000 | |
| 76 | 4.750 | | 5.500 | 5.625 | 5.750 | 5.875 | 6.000 | | |
| 78 | 4.875 | | 5.625 | 5.750 | 5.875 | 6.000 | | | |
| 80 | 5.000 | | 5.750 | 5.875 | 6.000 | | | | |
| 82 | 5.125 | | 5.875 | 6.000 | | | | | |
| 84 | 5.250 | | 6.000 | | | | | | |