SPS TECHNOLOGIES

*****DRS GENERATED*** PRINTED COPIES ARE UNCONTROLLED**

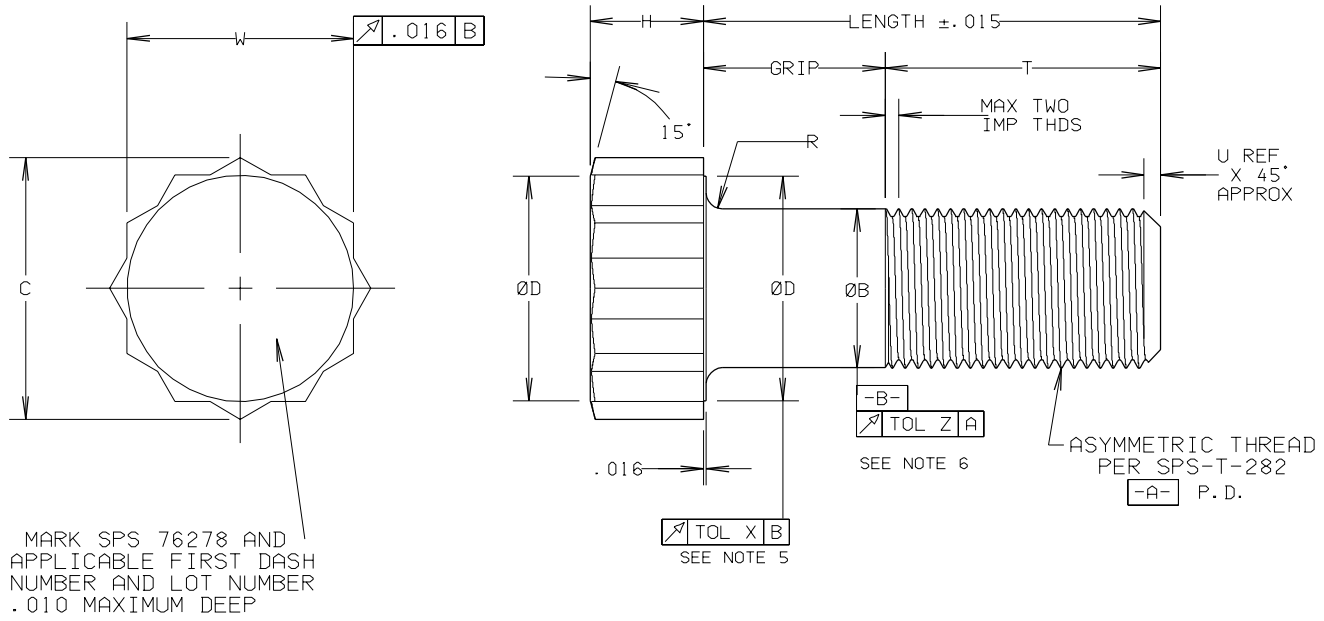

BASIC PART NUMBER	THREAD UNJF-3A	ØB	C MIN	ØD ±.016	H	R	T REF	U REF	W	X	Z
76278-14	.8750-14	.8740 .8730	1.414	1.234	.623	.088	1.514	.09	1.252 1.239	.018	.009
76278-16	1.0000-12	.9990 .9980	1.628	1.422	.710	.100	1.774	.10	1.440 1.427	.020	.009
76278-18	1.1250-12	1.1240 1.1225	1.842	1.609	.788	.112	1.949	.10	1.627 1.614	.022	.009
76278-20	1.2500-12	1.2490 1.2475	2.055	1.797	.875	.125	2.129	.10	1.814 1.801	.025	.009

1. MATERIAL: MP159 ® ALLOY PER 5842.
2. HEAT TREATMENT: 260 KSI MINIMUM ULTIMATE TENSILE STRENGTH.
3. FINISH: PLAIN.
4. FLUORESCENT PENETRANT INSPECT 100% PER ASTM E 1417, ACCEPTANCE CRITERIA PER SPS-I-650.
5. WHEN HELD IN A "V" BLOCK EQUAL TO OR LONGER THAN THE GRIP LENGTH.
6. WHEN HELD ON P.D. OF FULL THREADS CLOSEST TO THE BODY AND CHECKED AT A POINT ON THE BODY WITHIN ONE DIAMETER OF THE THREAD RUNOUT.
7. REQUIREMENTS: HEAD TO BE FORGED, ROLL THREADS AFTER AGING, COLD WORK HEAD TO SHANK FILLET
8. PART NUMBER: 76278 - 14 - 24 = .8750-14 BOLT, TENSION, 3.014 LONG, 1.500 GRIP
   - 24 = GRIP LENGTH IN SIXTEENTHS
   - 14 = DIAMETER IN SIXTEENTHS
   - 76278 = BASIC PART NUMBER
9. CHAMFER "U" PLUS INCOMPLETE THREADS NOT TO EXCEED 2 PITCHES.
10. UNLESS OTHERWISE SPECIFIED BREAK SHARP EDGES .005-.015 X 45°.
11. REFERENCE DIMENSIONS ARE FOR DESIGN PURPOSES ONLY AND ARE NOT INSPECTION REQUIREMENTS.
12. DIMENSIONS ARE IN INCHES UNLESS OTHERWISE SPECIFIED.
13. FOR WEIGHTS SEE SD.300.76278.
14. FOR COMPARISON NUT SEE SPS-N-76284.

® MP159 IS A REGISTERED TRADEMARK OF SPS TECHNOLOGIES

DRAWING NUMBER SPS-B-76278

ISSUE DATE 1/30/74

REVISION
2 1/02/91 REVISED AND REDRAWN
3 6/06/97

INFORMATION ON THIS DOCUMENT IS A TRADE SECRET, PROPRIETARY, AND SHALL NOT BE USED OR REPRODUCED IN WHOLE OR IN PART WITHOUT WRITTEN AUTHORIZATION OF SPS TECHNOLOGIES.

TOLERANCES ±.010 AND ±2°
SURFACE ROUGHNESS 125√
UNLESS OTHERWISE NOTED

DRAWN: STEVE FOSTER DATE: 1/02/91
APPROVED: L KLINE DATE: 7/2/97
APPROVED: R HUKARI 7/7/97

SPS TECHNOLOGIES

FSCM NO. 56878
CUSTODIAN: JENKINTOWN, PA.

STANDARDS AND SPECIFICATIONS
SPS-B-640
APPENDIX 6.7.1

TITLE
BOLT, 12 POINT, TENSION,
ASYMMETRIC THREAD, 260 KSI MINIMUM TENSILE STRENGTH
APPLICATIONS TO 1100°F, MP159 ALLOY PER AMS 5842

PART NUMBER: **76278 - [ ] - [ ]**

SHEET 1 OF 1 PROJECT 55A33