SPS TECHNOLOGIES

*****DRS GENERATED*** PRINTED COPIES ARE UNCONTROLLED**

DRAWING NUMBER SPS-B-75530 | ISSUE DATE 8/28/73 | REVISION 4 REVISED AND REDRAWN 7/16/99 5 11/18/99

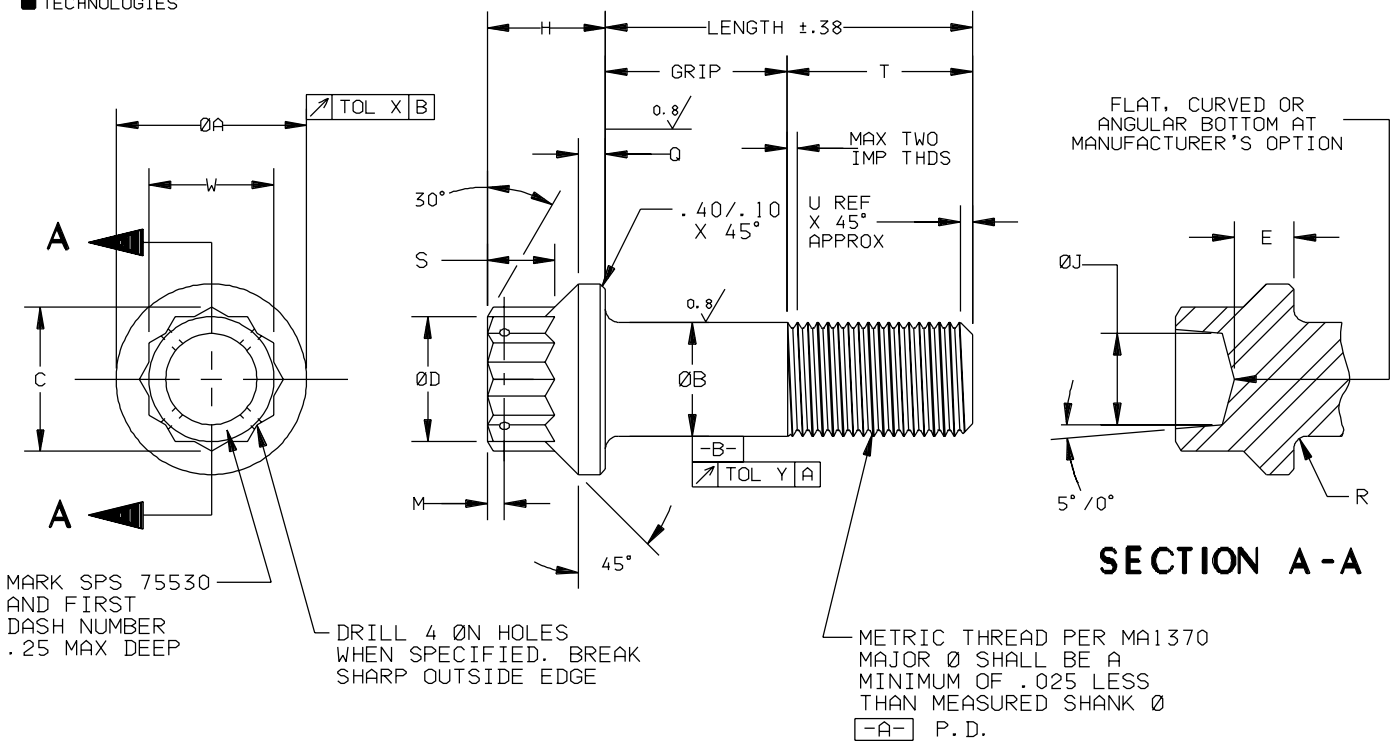

FIRST DASH NUMBER	THREAD PER MA1370	ØA	ØB	C MIN	ØD	E MIN	H	ØJ	M	ØN ±.12	Q	R	S MIN	T REF	U REF	W	X	Y
M508	MJ5 X 0.8	10.67 10.42	4.99 4.96	6.08	5.50 5.10	2.67	6.63 6.13	4.00 3.00	1.60	1.00	.63	1.03 .78	2.24	10.12	1.6	5.50 5.38	.100	.115
M610	MJ6 X 1.0	12.34 12.09	5.99 5.96	7.74	7.00 6.60	3.09	7.54 7.04	5.00 4.00	1.60	1.00	1.04	1.08 .83	2.64	12.18	2.0	7.00 6.85	.120	.115
M810	MJ8 X 1.0	15.90 15.65	7.99 7.96	9.92	9.00 8.60	4.13	9.36 8.86	7.00 6.00	1.80	1.50	1.39	1.18 .93	3.24	14.61	2.0	9.00 8.78	.160	.115
M1012	MJ10 X 1.25	19.42 19.17	9.99 9.96	12.12	11.00 10.60	5.22	11.17 10.67	8.00 7.00	1.80	1.50	1.82	1.28 1.03	3.79	18.10	2.5	11.00 10.73	.200	.115
M1212	MJ12 X 1.25	23.07 22.82	11.99 11.96	15.51	14.00 13.60	5.92	12.98 12.48	10.00 9.00	1.80	1.50	2.39	1.38 1.13	4.67	20.53	2.5	14.00 13.73	.240	.115
M1415	MJ14 X 1.50	26.55 26.30	13.99 13.96	17.77	16.00 15.60	7.27	14.80 14.30	11.00 10.00	2.40	1.50	3.13	1.48 1.23	4.98	24.02	3.0	16.00 15.73	.280	.115
M1615	MJ16 X 1.50	30.19 29.94	15.99 15.96	19.97	18.00 17.60	8.36	16.61 16.11	13.00 12.00	2.40	1.50	3.50	1.58 1.33	5.53	26.45	3.0	18.00 17.67	.320	.128
M1815	MJ18 X 1.50	33.83 33.58	17.98 17.95	22.23	20.00 19.60	9.43	18.43 17.93	14.00 13.00	2.40	1.50	3.88	1.68 1.43	6.08	28.88	3.0	20.00 19.67	.360	.144
M2015	MJ20 X 1.50	37.45 37.20	19.98 19.95	24.49	22.00 21.60	10.53	20.24 19.74	16.00 15.00	2.40	1.50	4.30	1.78 1.53	6.60	31.31	3.0	22.00 21.67	.400	.160

1. MATERIAL: A286 CRES CHEMISTRY OF AMS 5737 OR AMS 5726.
2. HEAT TREATMENT: 1400 MPa MINIMUM TENSILE STRENGTH. 758 MPa MINIMUM SHEAR STRENGTH.
3. FINISH: CADMIUM PLATE PER QQ-P-416, TYPE I, CLASS 3 OR TYPE II, CLASS 3.
   PASSIVATE PER AMS-QQ-P-35.
   SILVER PLATE PER AMS 2410, 8-14 MICROMETERS THICK.
4. REFERENCE DIMENSIONS ARE FOR DESIGN PURPOSES ONLY AND ARE NOT INSPECTION REQUIREMENTS.
5. DIMENSIONS ARE IN MILLIMETERS.
6. CHAMFER "U" PLUS INCOMPLETE THREADS NOT TO EXCEED TWO PITCHES.
7. COMPANION NUT: SEE DRAWING SPS-N-75688.
8. FOR WEIGHTS SEE SD.300.75530.
9. PART NUMBER: 75530(_)(_)(_)(_)

- (_) = GRIP LENGTH IN MILLIMETERS
- (_) "H" = CROSSDRILLED HEADS
  "-" = NO CROSSDRILLED HEADS
- (_) = FIRST DASH NUMBER PER TABLE
- (_) "C" = CADMIUM PLATE PER QQ-P-416, TYPE I, CLASS 3
  "D" = CADMIUM PLATE PER QQ-P-416, TYPE II, CLASS 3
  "S" = SILVER PLATE
  "-" = PASSIVATE
- 75530 = BASIC PART NUMBER

INFORMATION ON THIS DOCUMENT IS A TRADE SECRET, PROPRIETARY, AND SHALL NOT BE USED OR REPRODUCED IN WHOLE OR IN PART WITHOUT WRITTEN AUTHORIZATION OF SPS TECHNOLOGIES.

TOLERANCES ±0.25 AND ±2° SURFACE ROUGHNESS 3.2 UNLESS OTHERWISE NOTED	THIS PRODUCT DRAWING IS DRAFTED IN ACCORDANCE WITH ASME Y14.5M	SPS TECHNOLOGIES	FSCM NO. 56878 CUSTODIAN: JENKINTOWN, PA.	STANDARDS AND SPECIFICATIONS SPS-B-649 APPENDIX 4.5
DRAWN BY: STEVE FOSTER	DATE: 7/16/99	TITLE BOLT, TENSION, DOUBLE HEXAGON, FLANGED 1400 MPa MINIMUM TENSILE STRENGTH		PART NUMBER: 75530
APPROVED: R LANDT APPROVED: L KLINE	DATE: 11/18/99			SHEET 1 OF 1