SPS TECHNOLOGIES

*****DRS GENERATED*** PRINTED COPIES ARE UNCONTROLLED**

DRAWING NUMBER **SPS-B-74179**

ISSUE DATE 1/21/72

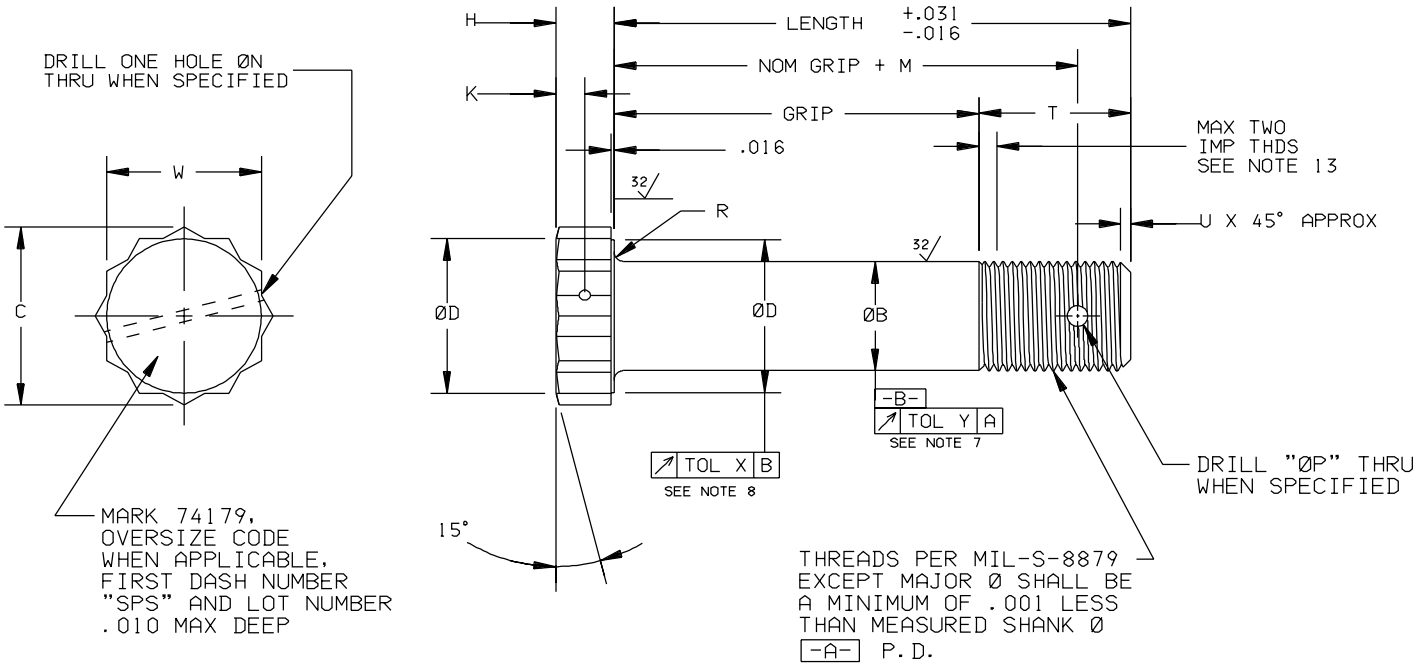

FIRST DASH NO	THREAD SIZE UNJF-3A	ØB NOM DIA	ØB .0156 O/S	ØB .03125 O/S	C MIN	ØD ±.016	H	K	M ±.016	N	ØP ±.005	R RAD	T REF	U REF	W	X TIR	Y TIR
-3	.1900-32	.1894 .1885	.2050 .2041	.2206 .2197	.419	.375	.140	.070	⊥/	.037	⊥/	.019	.236	.040	.376 .367	.005	.0045
-4	.2500-28	.2492 .2483	.2648 .2639	.2804 .2795	.491	.438	.164	.082	⊥/	.037	⊥/	.025	.293	.040	.439 .430	.005	.0045
-5	.3125-24	.3117 .3108	.3273 3264	.3429 .3420	.561	.500	.187	.093	.232	.055	.076	.031	.351	.050	.502 .492	.006	.0045
-6	.3750-24	.3742 .3733	.3898 .3889	.4054 .4045	.631	.562	.210	.105	.267	.055	.106	.037	.400	.050	.564 .553	.008	.0045
-7	.4375-20	.4367 .4358	.4523 .4514	.4679 .4670	.775	.687	.257	.128	.341	.055	.106	.043	.466	.060	.689 .678	.009	.0060
-8	.5000-20	.4991 .4982	.5147 .5138	.5303 .5294	.846	.750	.281	.140	.376	.055	.106	.050	.516	.060	.752 .741	.010	.0060
-9	.5625-18	.5615 .5610	.5771 .5766	.5927 .5922	.987	.875	.328	.164	.471	.076	.141	.056	.590	.070	.877 .865	.011	.0060
-10	.6250-18	.6240 .6235	.6396 .6391	.6552 .6547	1.059	.938	.350	.175	.531	.076	.141	.062	.632	.070	.940 .928	.012	.0060
-12	.7500-16	.7490 .7485	.7646 .7641	.7802 .7797	1.200	1.047	.400	.200	.724	.076	.141	.075	.852	.080	1.064 1.052	.015	.0060
-14	.8750-14	.8740 .8735	.8896 .8891	.9052 .9047	1.414	1.234	.468	.234	.858	.106	.141	.088	.992	.090	1.252 1.239	.018	.0090
-16	1.0000-12	.9990 .9985	1.0146 1.0141	1.0302 1.0297	1.628	1.422	.539	.270	1.007	.106	.141	.100	1.146	.100	1.440 1.427	.020	.0090
-18	1.1250-12	1.1240 1.1235	1.1396 1.1391	1.1552 1.1547	1.842	1.609	.609	.305	1.092	.106	.141	.112	1.262	.100	1.627 1.614	.022	.0090
-20	1.2500-12	1.2490 1.2485	1.2646 1.2641	1.2802 1.2797	2.056	1.797	.690	.345	1.205	.106	.141	.125	1.375	.100	1.814 1.801	.025	.0090
-22	1.3750-12	1.3740 1.3725	1.3896 1.3881	1.4053 1.4038	2.269	1.984	.750	.375	1.330	.106	.141	.138	1.504	.100	2.002 1.988	.028	.0120
-24	1.5000-12	1.4990 1.4975	1.5146 1.5131	1.5303 1.5288	2.434	2.173	.820	.410	1.454	.106	.141	.150	1.628	.100	2.190 2.176	.030	.0120

⊥/ DUE TO SPACE LIMITATIONS, COTTER PIN HOLE NOT RECOMMENDED

REVISION

2	12/09/88 REVISED AND REDRAWN
3	4/27/90
4	10/24/90
5	11/17/93
6	12/22/93
7	2/25/94
8	6/06/97
9	7/10/2000

INFORMATION ON THIS DOCUMENT IS A TRADE SECRET, PROPRIETARY, AND SHALL NOT BE USED OR REPRODUCED IN WHOLE OR IN PART WITHOUT WRITTEN AUTHORIZATION OF SPS TECHNOLOGIES.

TOLERANCES ±.010 AND ±2°
SURFACE ROUGHNESS 125√
UNLESS OTHERWISE NOTED

THIS PRODUCT DRAWING IS DRAFTED IN ACCORDANCE WITH ASME Y14.5M

DRAWN BY: STEVE FOSTER DATE: 7/10/2000
APPROVED: L. KLINE
APPROVED: R. LANDT DATE: 7/21/2000

SPS TECHNOLOGIES

FSCM NO. 56878
CUSTODIAN: JENKINTOWN, PA.

STANDARDS AND SPECIFICATIONS
SPS-B-640
APPENDIX 3.13.1

TITLE BOLT, DOUBLE HEXAGON, SHEAR
ALLOY 718
FOR APPLICATIONS TO 900°F

PART NUMBER: 74179( )( )-( )-( )( )

SHEET 1 OF 1

1. MATERIAL: ALLOY 718 TO THE CHEMISTRY OF AMS 5662.
2. HEAT TREATMENT: 220-255 KSI UTS (132 KSI MIN SHEAR STRENGTH) UP TO AND INCLUDING DASH 10 SIZES.
   125 KSI MIN SHEAR STRENGTH FOR DASH 12 AND LARGER.
3. FINISH: PASSIVATE PER AMS-QQ-P-35.
4. FLUORESCENT PENETRANT INSPECT 100% PER ASTM E 1417. ACCEPTANCE CRITERIA PER SPS-I-650.
5. REQUIREMENTS: HEAD TO BE FORGED.
   THREADS TO BE ROLLED AFTER HEAT TREATMENT.
   HEAD TO SHANK FILLET RADIUS TO BE ROLLED AFTER HEAT TREATMENT.
6. PART NUMBER: 74179HX - 8 - A 16 = BOLT,.0156 OVERSIZE BODY,.500 THREAD DIAMETER,1.000 GRIP.

   16 — GRIP LENGTH IN 1/16 INCREMENTS.

   A — "A" DESIGNATES WITHOUT DRILLED THREAD
   NO LETTER DESIGNATES DRILLED THREAD

   8 — THREAD DIAMETER IN 1/16 INCREMENTS

   X — "X" DESIGNATES .0156 OVERSIZE BODY DIAMETER
   Y — "Y" DESIGNATES .03125 OVERSIZE BODY DIAMETER
   NO LETTER DESIGNATES STANDARD BODY DIAMETER

   H — H DESIGNATES BOLTS WITH CROSSDRILLED HEAD

   74179 — BASIC PART NUMBER
   LENGTH = NOMINAL GRIP LENGTH + T
7. WHEN HELD ON PITCH DIAMETER OF FULL THREADS CLOSEST TO BODY AND CHECKED AT A POINT ON THE BODY WITHIN ONE DIAMETER OF THE THREAD RUNOUT.
8. WHEN HELD IN A "V" BLOCK EQUAL TO OR LONGER THAN THE GRIP LENGTH.
9. REFERENCE DIMENSIONS ARE FOR DESIGN PURPOSES ONLY AND ARE NOT AN INSPECTION REQUIREMENT.
10. COTTER PIN HOLE CENTERLINE: WITHIN .010 AND NORMAL WITHIN 2° OF BOLT CENTERLINE.
11. REQUIREMENTS OF SPS-B-640 ON FATIGUE STRENGTH NOT REQUIRED ON CROSSDRILLED ITEMS.
12. UNLESS OTHERWISE SPECIFIED BREAK ALL SHARP EDGES .003-.015 X 45°.
13. FOR "X" AND "Y" OVERSIZE PARTS, THREAD RUNOUT TO BE 3 MAX IMP. THREADS.

REVISION

2 12/09/88 REVISED AND REDRAWN
3 4/27/90
4 10/24/90
5 11/17/93
6 12/22/93
7 2/25/94
8 6/06/97
9 7/10/2000