SPS TECHNOLOGIES

*****DRS GENERATED*** PRINTED COPIES ARE UNCONTROLLED**

DRAWING NUMBER **SPS-B-74178**

ISSUE DATE 12/17/71

REVISION (3) REVISED AND REDRAWN 9/04/91 (4) 6/06/97

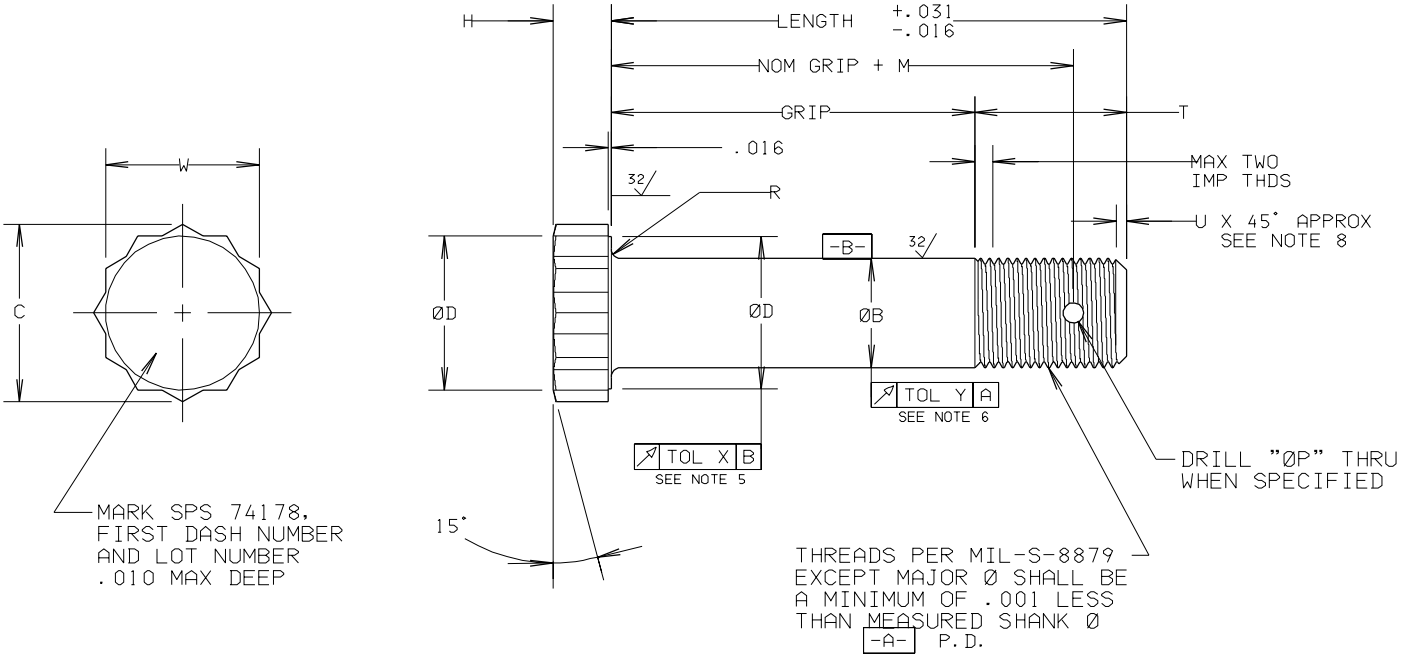

FIRST DASH NO	THREAD SIZE UNJF-3A	ØB	C MIN	ØD ±.016	H	M ±.016	ØP ±.005	R RAD	T REF	U REF	W	X TIR	Y TIR
-3	.1900-32	.1894 .1885	.419	.375	.140	1/	1/	.019	.236	.040	.376 .367	.005	.0045
-4	.2500-28	.2492 .2483	.491	.438	.164	1/	1/	.025	.293	.040	.439 .430	.005	.0045
-5	.3125-24	.3117 .3108	.561	.500	.187	.232	.076	.031	.351	.050	.502 .492	.006	.0045
-6	.3750-24	.3742 .3733	.631	.562	.210	.267	.106	.037	.400	.050	.564 .553	.008	.0045
-7	.4375-20	.4367 .4358	.775	.687	.257	.341	.106	.043	.466	.060	.689 .678	.009	.0060
-8	.5000-20	.4991 .4982	.846	.750	.281	.376	.106	.050	.516	.060	.752 .741	.010	.0060
-9	.5625-18	.5615 .5610	.987	.875	.328	.471	.141	.056	.590	.070	.877 .865	.011	.0060
-10	.6250-18	.6240 .6235	1.059	.938	.350	.531	.141	.062	.632	.070	.940 .928	.012	.0060
-12	.7500-16	.7490 .7485	1.200	1.047	.400	.724	.141	.075	.852	.080	1.064 1.052	.015	.0060
-14	.8750-14	.8740 .8735	1.414	1.234	.468	.858	.141	.088	.992	.090	1.252 1.239	.018	.0090
-16	1.0000-12	.9990 .9985	1.628	1.422	.539	1.007	.141	.100	1.146	.100	1.440 1.427	.020	.0090
-18	1.1250-12	1.1240 1.1235	1.842	1.609	.609	1.092	.141	.112	1.262	.100	1.627 1.614	.022	.0090
-20	1.2500-12	1.2490 1.2485	2.056	1.797	.690	1.205	.141	.125	1.375	.100	1.814 1.801	.025	.0090
-22	1.3750-12	1.3740 1.3725	2.269	1.984	.750	1.330	.141	.138	1.504	.100	2.002 1.988	.028	.0120
-24	1.5000-12	1.4990 1.4975	2.434	2.173	.820	1.454	.141	.150	1.628	.100	2.190 2.176	.030	.0120

1/ DUE TO SPACE LIMITATIONS, COTTOR PIN HOLE NOT RECOMMENED

INFORMATION ON THIS DOCUMENT IS A TRADE SECRET, PROPRIETARY, AND SHALL NOT BE USED OR REPRODUCED IN WHOLE OR IN PART WITHOUT WRITTEN AUTHORIZATION OF SPS TECHNOLOGIES.

TOLERANCES ±.010 AND ±2°
SURFACE ROUGHNESS 125√
UNLESS OTHERWISE NOTED

DRAWN: STEVE FOSTER DATE: 9/04/91
APPROVED: L KLINE DATE: 7/2/97
APPROVED: R HUKARI 7/7/97

SPS TECHNOLOGIES

FSCM NO. 56878
CUSTODIAN: JENKINTOWN, PA.

STANDARDS AND SPECIFICATIONS
SPS-B-640
APPENDIX 2.13

TITLE
BOLT, DOUBLE HEXAGON, SHEAR
INCONEL 718, 108 KSI MINIMUM SHEAR
APPLICATIONS TO 900°F

PART NUMBER: 74178-( )-( )

SHEET 1 OF 2 PROJECT 9818

1. MATERIAL: INCONEL 718 PER CHEMISTRY OF AMS 5662.
2. HEAT TREATMENT: 180 KSI MINIMUM ULTIMATE TENSILE STRENGTH.
   108 KSI MINIMUM SHEAR STRENGTH.
3. FINISH: PASSIVATE PER ASTM A967.
4. PART NUMBER: 74178 - 4 - A 8 = .2500-28 X .793 SHEAR BOLT, .500 GRIP WITHOUT CROSS DRILLED SHANK

   8 = GRIP LENGTH IN SIXTEENTHS
   A = "A" = NO CROSSDRILLED SHANK
   4 = DIAMETER IN SIXTEENTHS
   74178 = BASIC PART NUMBER

   LENGTH = GRIP PLUS "T" REF
5. WHEN HELD IN "V" BLOCK EQUAL TO OR LONGER THAN THE GRIP LENGTH.
6. WHEN HELD ON P.D. OF FULL THREADS CLOSEST TO BODY AND CHECKED AT A POINT ON THE BODY WITHIN ONE DIAMETER OF THE THREAD RUNOUT.
7. REFERENCE DIMENSIONS ARE FOR DESIGN PURPOSES AND ARE NOT INSPECTION REQUIREMENTS.
8. CHAMFER PLUS INCOMPLETE THREADS NOT TO EXCEED TWO PITCHES.
9. REQUIREMENTS OF SPECIFICATION SPS-B-640 APPENDIX 2.13 FATIGUE STRENGTH NOT APPLICABLE ON CROSSDRILLED PARTS.
10. FOR WEIGHTS SEE SD.300.74178.
11. DIMENSIONS ARE IN INCHES.