SPS TECHNOLOGIES

*****DRS GENERATED*** PRINTED COPIES ARE UNCONTROLLED**

DRAWING NUMBER **SPS-B-72991**

ISSUE DATE 8/28/70

REVISION

4 12/18/90 REVISED AND REDRAWN

5 2/17/93

6 10/26/99

7 4/27/2000

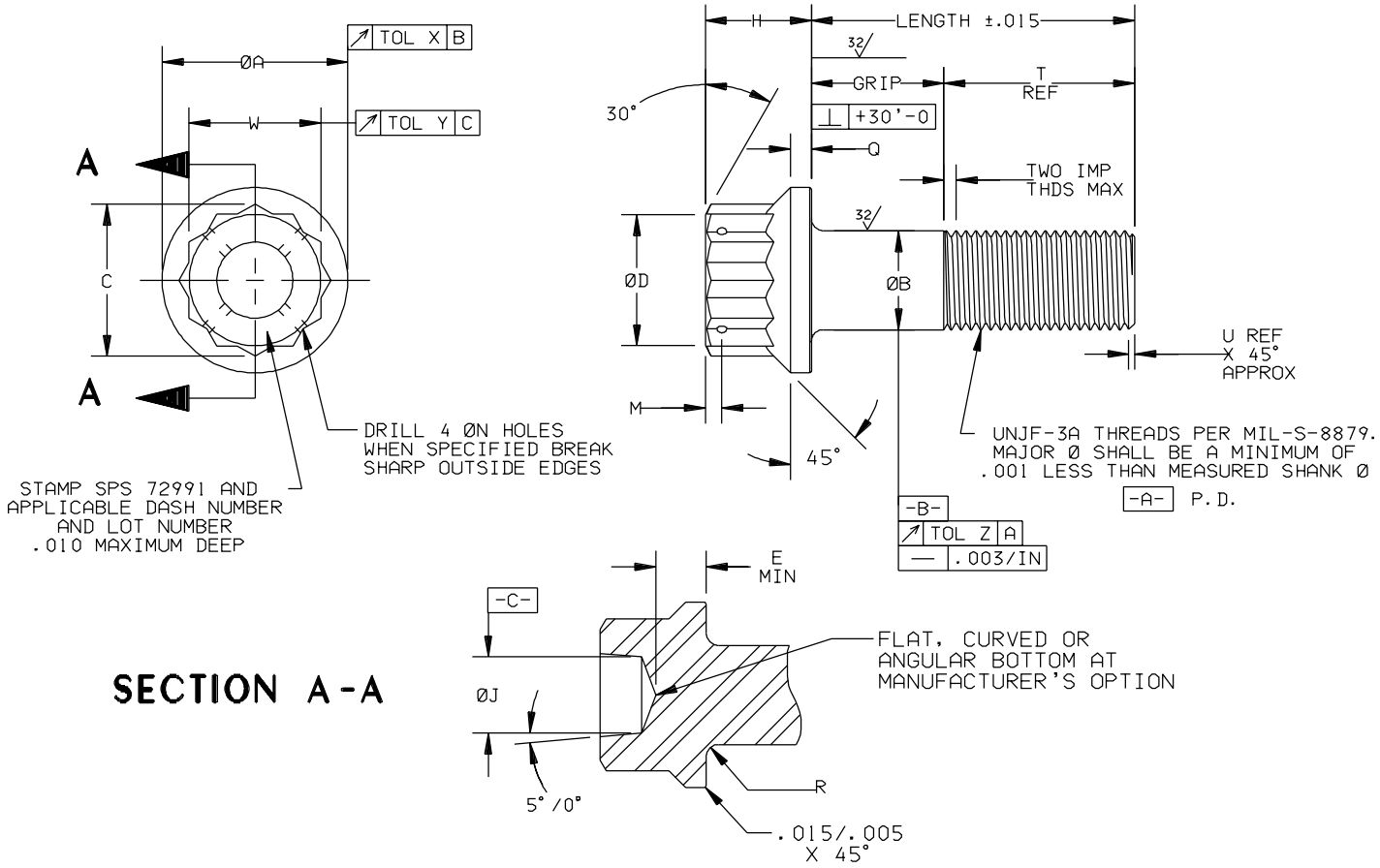

SECTION A-A

FIRST DASH NUMBER	THREAD UNJF-3A	ØA +.005 -.005	ØB +.0005 -.0005	C MIN	ØD +.000 -.015	E MIN	H	ØJ +.010 -.030	M	ØN ±.005	Q	R ±.005	T REF	U REF	W MAX/MIN	X	Y	Z
3	.1900-32	.345	.1890	.277	.250	.092	.275	.125	.062	.037	.064	.036	.334	.04	.251/.243	.005	.004	.0045
4	.2500-28	.433	.2490	.347	.312	.135	.300	.180	.062	.037	.069	.036	.412	.04	.313/.304	.005	.004	.0045
5	.3125-24	.526	.3115	.419	.375	.162	.348	.215	.070	.055	.082	.036	.480	.05	.376/.367	.006	.005	.0045
6	.3750-24	.644	.3740	.491	.437	.197	.388	.260	.070	.055	.091	.052	.560	.05	.439/.430	.008	.006	.0045
7	.4375-20	.745	.4365	.561	.500	.228	.435	.320	.070	.055	.099	.052	.665	.06	.502/.492	.009	.008	.0060
8	.5000-20	.823	.4990	.631	.562	.254	.504	.380	.094	.055	.123	.052	.761	.06	.564/.553	.010	.008	.0060
9	.5625-18	.933	.5610	.703	.625	.287	.557	.440	.094	.055	.133	.052	.828	.07	.627/.616	.011	.009	.0060
10	.6250-18	1.045	.6235	.775	.687	.327	.618	.500	.094	.055	.150	.068	.868	.07	.690/.679	.012	.010	.0060
12	.7500-16	1.225	.7485	.917	.812	.380	.711	.570	.094	.055	.178	.068	1.009	.08	.814/.803	.015	.012	.0060
14	.8750-14	1.433	.8735	1.059	.937	.438	.808	.650	.125	.055	.198	.068	1.175	.09	.940/.928	.018	.014	.0090
16	1.0000-12	1.620	.9985	1.200	1.062	.493	.923	.740	.125	.055	.222	.068	1.345	.10	1.064/1.052	.020	.016	.0090

1. MATERIAL: ALLOY 718 PER CHEMISTRY OF AMS 5662.
2. HEAT TREATMENT: 220 KSI MINIMUM ULTIMATE TENSILE STRENGTH AT ROOM TEMPERATURE.
3. FINISH: PASSIVATE PER AMS-QQ-P-35 OR CADMIUM PLATE PER NAS 672 OR CADMIUM PLATE PER QQ-P-416, TYPE I, CLASS 2.
4. FLUORESCENT PENETRANT INSPECT PER ASTM E1417.
5. PART NUMBER: 72991( )C - 4 H - 8 = .2500-28 BOLT, .912 LONG, .500 GRIP, CADMIUM PLATE PER NAS 672, CROSSDRILLED HEADS

   - 8 = GRIP LENGTH IN SIXTEENTHS
   - H = "H" = CROSSDRILLED HEAD; NO LETTER = NO CROSSDRILLED HEAD
   - 4 = NOMINAL DIAMETER IN SIXTEENTHS
   - C = "C" = CADMIUM PLATE PER NAS 672; "D" = CADMIUM PLATE PER QQ-P-416, TYPE I, CLASS 2
   - ( ) = "X" = .0156 OVERSIZE BODY; "Y" = .03125 OVERSIZE BODY; NO LETTER = STANDARD SIZE BODY
   - 72991 = BASIC PART NUMBER
   - LENGTH = NOMINAL GRIP + "T REF"
6. REFERENCE DIMENSIONS ARE FOR DESIGN PURPOSES AND ARE NOT AN INSPECTION REQUIREMENT.
7. DIMENSIONS ARE IN INCHES.
8. THE RECOMMENED NUT TO USE WITH THIS BOLT IS SPS-N-75943.

INFORMATION ON THIS DOCUMENT IS A TRADE SECRET, PROPRIETARY, AND SHALL NOT BE USED OR REPRODUCED IN WHOLE OR IN PART WITHOUT WRITTEN AUTHORIZATION OF SPS TECHNOLOGIES.

TOLERANCES ±.010 AND ±2° SURFACE ROUGHNESS 125√ UNLESS OTHERWISE NOTED	THIS PRODUCT DRAWING IS DRAFTED IN ACCORDANCE WITH ASME Y14.5M	SPS TECHNOLOGIES	FSCM NO. 56878 CUSTODIAN: JENKINTOWN, PA.	STANDARDS AND SPECIFICATIONS SPS-B-640 APPENDIX 5.6
DRAWN BY: STEVE FOSTER	DATE: 10/26/99	TITLE BOLT, 12 POINT, TENSION 220 KSI MINIMUM TENSILE STRENGTH APPLICATIONS TO 900°F, ALLOY 718		PART NUMBER: 72991( )( )-( )( )-( )
APPROVED: L. KLINE	DATE: 5/10/2000			
APPROVED: R. LANDT				SHEET 1 OF 1