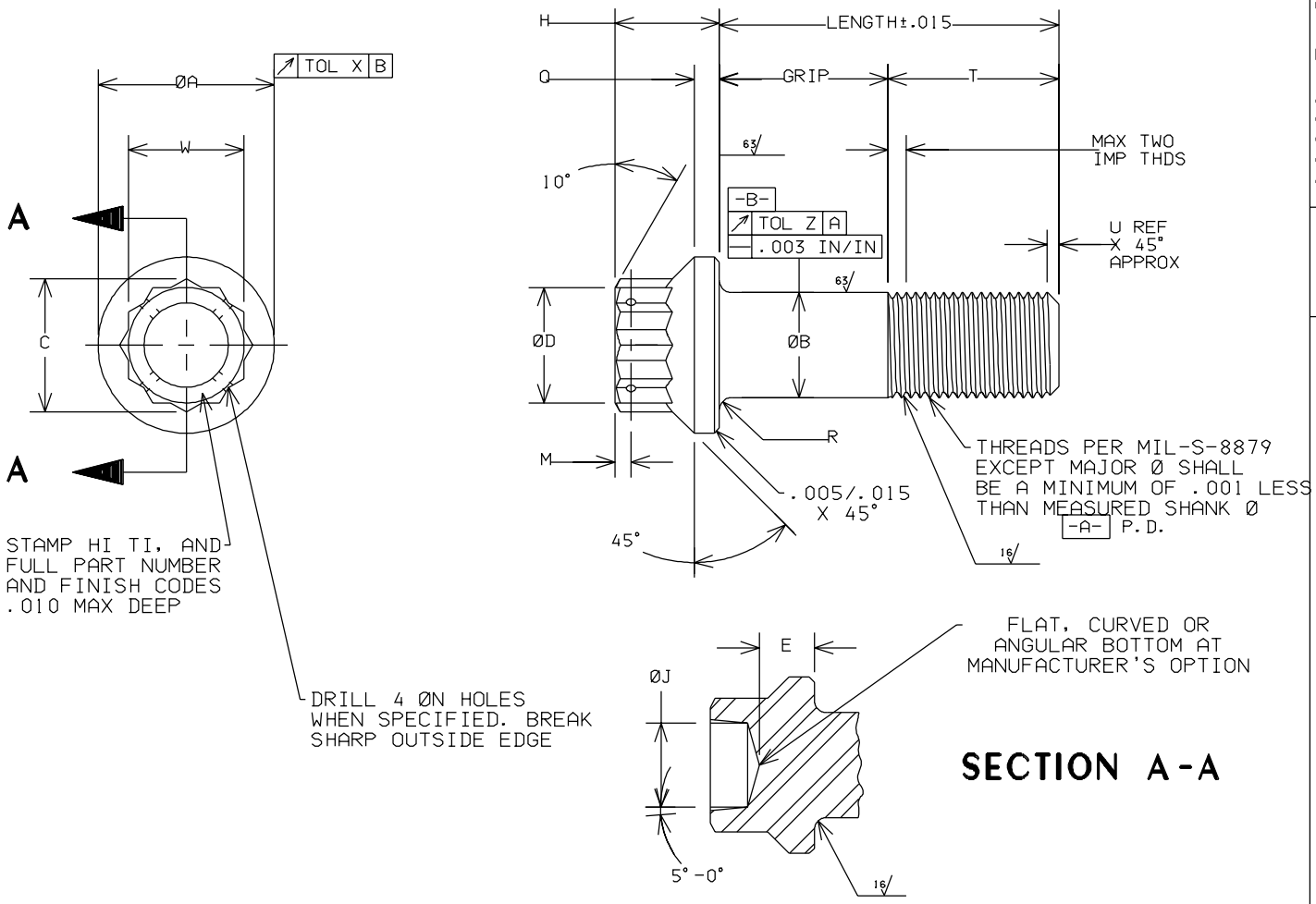

FIRST DASH NO	THREAD SIZE UNJF-3A	ØA ±.005	ØB MAX	ØB MIN	C MIN	ØD +.000 -.015	E MIN	H ±.010	ØJ +.010 -.030	M ±.010	N ±.005	Q ±.010	R MAX	R MIN	T REF	U REF	W MAX	W MIN
-4	.2500-28	433	.2495	.2485	.347	.312	.135	.300	.180	.062	.037	.069	.041	.031	.485	.040	.315	.306
-5	.3125-24	.526	.3120	.3110	.419	.375	.162	.348	.215	.070	.055	.082	.041	.031	.572	.050	.377	.368
-6	.3750-24	.644	.3745	.3735	.491	.437	.197	.388	.260	.070	.055	.091	.057	.047	.619	.050	.439	.430
-7	.4375-20	.745	.4370	.4360	.561	.500	.228	.435	.320	.070	.055	.099	.057	.047	.694	.060	.503	.494
-8	.5000-20	.823	.4995	.4985	.631	.562	.254	.504	.380	.094	.055	.123	.057	.047	.741	.060	.565	.556
-9	.5625-18	.933	.5615	.5605	.703	.625	.287	.557	.440	.094	.055	.133	.057	.047	.826	.070	.628	.619
-10	.6250-18	1.045	.6240	.6230	.775	.687	.327	.618	.500	.094	.055	.150	.073	.063	.873	.070	.691	.682
-12	.7500-16	1.225	.7490	.7480	.917	.812	.380	.711	.570	.094	.055	.178	.073	.063	.993	.080	.817	.808
-14	.8750-14	1.433	.8740	.8730	1.059	.937	.438	.808	.650	.125	.055	.198	.073	.063	1.194	.090	.943	.934
-16	1.0000-12	1.620	.9990	.9980	1.200	1.062	.493	.923	.740	.125	.055	.222	.073	.063	1.382	.100	1.066	1.056

FIRST DASH NO	CONC X TIR	CONC Y TIR
-4	.005	.0045
-5	.006	.0045
-6	.008	.0045
-7	.009	.0060
-8	.010	.0060
-9	.011	.0060
-10	.012	.0060
-12	.015	.0060
-14	.018	.0090
-16	.020	.0090

INFORMATION ON THIS DOCUMENT IS A TRADE SECRET, PROPRIETARY, AND SHALL NOT BE USED OR REPRODUCED IN WHOLE OR IN PART WITHOUT WRITTEN AUTHORIZATION OF SPS TECHNOLOGIES.

TOLERANCES ±.010 AND ±2°
SURFACE ROUGHNESS 125√
UNLESS OTHERWISE NOTED

DRAWN: STEVE FOSTER DATE: 4/06/90
APPROVED: L. KLINE DATE: 4/6/90
APPROVED: R. WAELTZ

SPS TECHNOLOGIES

FSCM NO. 56878
CUSTODIAN: JENKINTOWN, PA.

STANDARDS AND SPECIFICATIONS
NAS 621 EXCEPT PER NOTE 2 THIS DRAWING

TITLE
BOLT, DOUBLE HEXAGON, TENSION
6 AL-4V TITANIUM ALLOY

PART NUMBER: 55759V( )-( )

SHEET 1 OF 2 PROJECT 6930

1. MATERIAL: 6AL-4V TITANIUM ALLOY PER AMS 4928 OR AMS 4967.
2. TENSILE STRENGTH PER NAS 621 EXCEPT PARTS OVER .500 DIAMETER SHALL MEET 150,000 PSI MINIMUM ULTIMATE TENSILE STRENGTH.
3. FINISH: PLAIN OR ANODIZE TREATMENT PER AMS 2488 (SEE NOTE #6).
4. REFERENCE DIMENSIONS ARE FOR DESIGN PURPOSES ONLY AND ARE NOT AN INSPECTION REQUIREMENT.
5. BOLTS SHALL BE FREE FROM BURRS AND SHARP EDGES.
6. PART NUMBER: 55759V 4-8 T2

   - T2: NO CODE = NO TREATMENT; T1 = ANODIZE PER AMS 2488 TYPE 1; T2 = ANODIZE PER AMS 2488 TYPE 2
   - 8: GRIP LENGTH IN 1/16 INCREMENTS
   - 4: NOMINAL DIAMETER IN 1/16 INCREMENTS
   - 55759V: BASIC PART NUMBER

   NOMINAL LENGTH = GRIP LENGTH + "T" REF

7. CHAMFER "U" PLUS INCOMPLETE THREADS NOT TO EXCEED TWO PITCHES.