SPS TECHNOLOGIES

*****DRS GENERATED*** PRINTED COPIES ARE UNCONTROLLED**

DRAWING NUMBER SPS-B-54471

ISSUE DATE 2/24/59

REVISION (16) 11/26/90 REVISED AND REDRAWN (17) 4/01/97 (18) 5/29/97

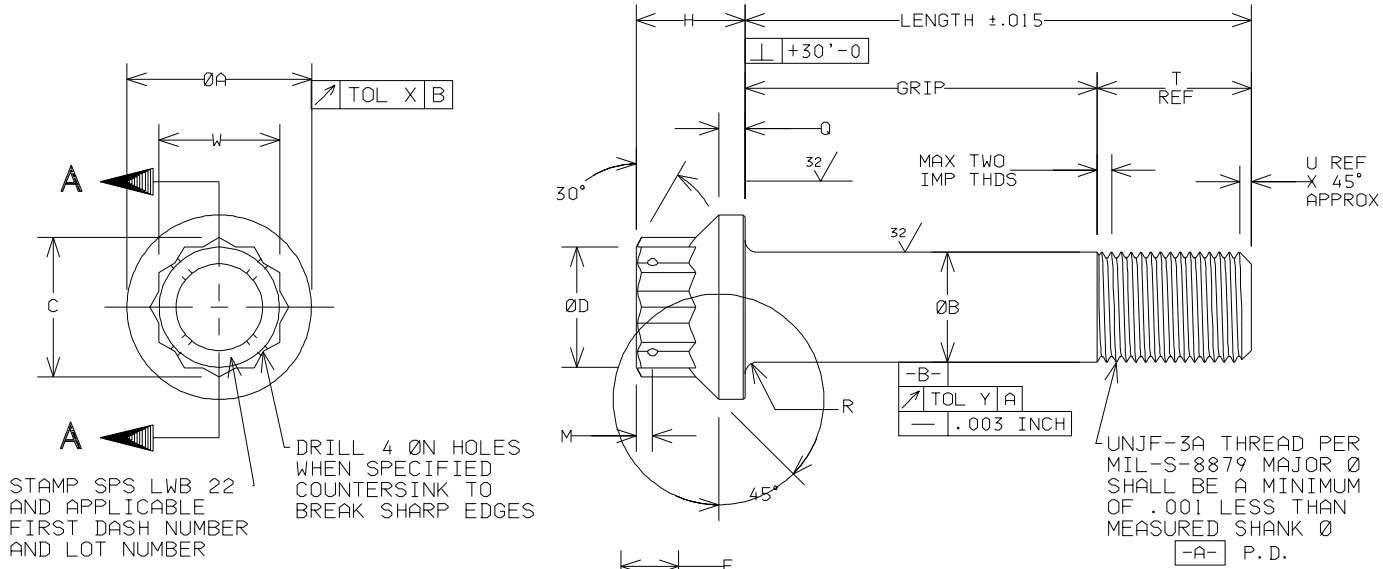

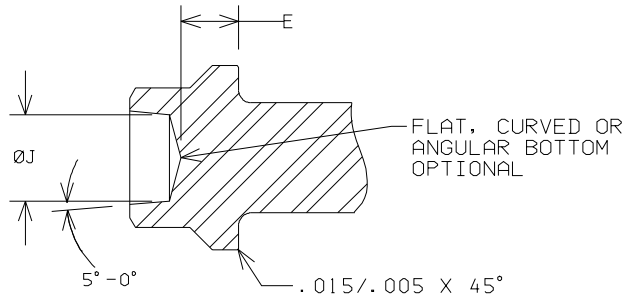

SECTION A-A

SPS PART NUMBER	THREAD UNJF-3A	ØA ±.005	ØB	C MIN	ØD +.000 -.015	E MIN	H ±.010	ØJ +.010 -.030	M ±.010	N ±.005	Q ±.010	R	T REF	U REF	W	X	Y
LWB 22-3	.1900-32	.345	.1895 .1885	.277	.250	.092	.275	.125	.062	.037	.064	.041 .031	.344	.04	.251 .243	.005	.0045
LWB 22-4	.2500-28	.433	.2495 .2485	.347	.312	.135	.300	.180	.062	.037	.069	.041 .031	.412	.04	.313 .304	.005	.0045
LWB 22-5	.3125-24	.526	.3120 .3110	.419	.375	.162	.348	.215	.070	.055	.082	.041 .031	.480	.05	.376 .367	.006	.0045
LWB 22-6	.3750-24	.644	.3745 .3735	.491	.437	.197	.388	.260	.070	.055	.091	.057 .047	.560	.05	.439 .430	.008	.0045
LWB 22-7	.4375-20	.745	.4370 .4360	.561	.500	.228	.435	.320	.070	.055	.099	.057 .047	.665	.06	.502 .492	.009	.0060
LWB 22-8	.5000-20	.823	.4995 .4985	.631	.562	.254	.504	.380	.094	.055	.123	.057 .047	.761	.06	.564 .553	.010	.0060
LWB 22-9	.5625-18	.933	.5615 .5605	.703	.625	.287	.557	.440	.094	.055	.133	.057 .047	.828	.07	.627 .616	.011	.0060
LWB 22-10	.6250-18	1.045	.6240 .6230	.775	.687	.327	.618	.500	.094	.055	.150	.073 .063	.868	.07	.690 .679	.012	.0060
LWB 22-12	.7500-16	1.225	.7490 .7480	.917	.812	.380	.711	.570	.094	.055	.178	.073 .063	1.009	.08	.814 .803	.015	.0060
LWB 22-14	.8750-14	1.433	.8740 .8730	1.059	.937	.438	.808	.650	.125	.055	.198	.073 .063	1.175	.09	.940 .928	.018	.0090
LWB 22-16	1.0000-12	1.620	.9990 .9980	1.200	1.062	.493	.923	.740	.125	.055	.222	.073 .063	1.345	.10	1.064 1.052	.020	.0090
LWB 22-16A	1.0000-14*	1.620	.9990 .9980	1.200	1.062	.493	.923	.740	.125	.055	.222	.073 .063	1.309	.09	1.064 1.052	.020	.0090
LWB 22-18	1.1250-12	1.870	1.1240 1.1225	1.414	1.250	.556	1.051	.840	.125	.055	.258	.073 .063	1.515	.10	1.252 1.239	.022	.0090
LWB 22-20	1.2500-12	2.120	1.2490 1.2475	1.484	1.312	.636	1.155	.950	.125	.055	.269	.089 .077	1.665	.10	1.314 1.301	.025	.0090
LWB 22-22	1.3750-12	2.308	1.3740 1.3725	1.628	1.437	.698	1.266	1.070	.188	.055	.274	.089 .077	1.815	.10	1.440 1.427	.028	.0120
LWB 22-24	1.5000-12	2.495	1.4990 1.4975	1.842	1.625	.750	1.434	1.200	.188	.055	.335	.089 .077	2.015	.10	1.627 1.614	.030	.0120

* = UNJS-3A

INFORMATION ON THIS DOCUMENT IS A TRADE SECRET, PROPRIETARY, AND SHALL NOT BE USED OR REPRODUCED IN WHOLE OR IN PART WITHOUT WRITTEN AUTHORIZATION OF SPS TECHNOLOGIES.

TOLERANCES ±.010 AND ±2°
SURFACE ROUGHNESS 125√
UNLESS OTHERWISE NOTED
DRAWN: STEVE FOSTER DATE: 11/26/90
APPROVED: L. KLINE DATE: 5/29/97
APPROVED: S. FOSTER

SPS TECHNOLOGIES

FSCM NO. 56878
CUSTODIAN: JENKINTOWN, PA.

STANDARDS AND SPECIFICATIONS
SPS-B-640
APPENDIX 5.1

TITLE
BOLT, 12 POINT, TENSION, LIGHTWEIGHT
220 KSI MINIMUM TENSILE STRENGTH
APPLICATIONS TO 450°F

PART NUMBER: LWB 22

SHEET 1 OF 2 PROJECT 55A20

1. MATERIAL: ALLOY STEEL PER AMS 6487.
2. HEAT TREATMENT: 220 KSI MINIMUM ULTIMATE TENSILE STRENGTH.
   132 KSI MINIMUM SHEAR STRENGTH.
   HRC 46-50.
3. FINISH: CADMIUM FLUOBORATE PLATE PER NAS 672 EXCEPT PLATING THICKNESS TO BE .0002 - .0004 THICH.
   CADMIUM FLUOBORATE PLATE PER NAS 672.
   VACUUM CADMIUM PLATE PER MIL-C-8837 TYPE I, CLASS 2
   VACUUM CADMIUM PLATE PER MIL-C-8837 TYPE II, CLASS 2
4. MAGNETIC PARTICLE INSPECT 100% PER ASTM E 1444.
5. REQUIREMENTS: HEAD OF BOLT TO BE FORGED
   LIGHTENING HOLE IN HEAD MAY BE FORGED OR DRILLED
   THREAD SHALL BE ROLLED AFTER HEAT TREAT
   HEAD TO SHANK FILLET TO BE COLD WORKED
6. PART NUMBER: LWB 22 Y - 4 H - 8 = .250-28 BOLT, .912 LONG, .500 GRIP, CROSSDRILLED HEAD, CADMIUM PLATING PER NAS 672 (.0003-.0005 THICK).
   - 8 = GRIP LENGTH IN SIXTEENTHS
   - H = "H" = CROSSDRILLED HEADS; NO LETTER = NO CROSSDRILLED HEADS
   - 4 = NOMINAL DIAMETER IN SIXTEENTHS
   - Y = "D" = VACUUM CADMIUM PLATING TYPE II, CLASS 2; "G" = VACUUM CADMIUM PLATING TYPE I, CLASS 2; "Y" = CADMIUM PLATING PER NAS 672 (.0003-.0005 THICK); NO LETTER = CADMIUM PLATING PER NAS 672 (.0002-.0004 THICK)
   - LWB 22 = BASIC PART NUMBER
7. BREAK SHARP EDGES .005 - .015 X 45°.
8. REFERENCE DIMENSIONS ARE FOR DESIGN PURPOSES ONLY AND ARE NOT INSPECTION REQUIREMENTS.
9. CHAMFER "U" REF X 45° APPROX. PLUS INCOMPLETE THREADS NOT TO EXCEED TWO PITCHES.
10. DIMENSIONS ARE IN INCHES.
11. FOR WEIGHTS SEE SD.300.54471.